Freewheel Lathe Drive

Bicycle parts convert muscle power

by Richard Starr

A foot-powered lathe must somehow convert the downward motion of the turner's foot to rotary motion of the workpiece. The crank and flywheel (page 60) have been used to do this at least since Leonardo's time. The problem with this system is that power transmission is not linear. The treadle turns the flywheel farther in midstroke than it does at the top and bottom of the stroke—as the treadle descends, it becomes easier, and then more difficult to push. Thus the system can accept a strong power impulse only in midstroke, while our legs can efficiently apply a heavy, constant push throughout the motion of the treadle.

A freewheel lathe drive can more efficiently harness muscle energy since it can use all the power we can supply during the treadle stroke. It can be built from bicycle parts and inexpensive hardware. Two lathes based on this drive system have been in use for several years in our shop at the Richmond Middle School, Hanover, N.H. (*Fine Woodworking*, Winter '77), and have proven to be sturdy and reliable in a very demanding situation. Freewheel lathe drive has other advantages over the crank and flywheel. The lathe starts in the right direction as soon as the treadle is pressed, with no need to nudge the flywheel into motion by hand. The turner is free to stop pumping without fear of being thrown over backwards by a treadle that keeps moving while the lathe coasts. It is easy to learn to use, because the turner needn't develop the rhythmic pumping skill required by the crank and flywheel. Most important, the freewheel lathe is simpler and easier to build than other continuously rotating foot-powered lathes.

The freewheel lathe is a direct descendant of the springpole lathe. On these ancient lathes, the treadle is attached by a rope or thong to a flexible pole or bow hung from the ceiling of the shop. The midsection of the rope is wrapped several times around the turning stock, which is set between dead centers on the lathe. As the treadle is pressed, the work spins toward the turner; when it is released, the bent pole tugs the treadle upwards, spinning the work backwards. Turning on such a lathe is a series of interrupted cuts.

The freewheel system substitutes a bicycle chain for the rope and a long spring for the pole or bow. The idea came from Berny Butcher, of Alstead, N.H., who converted a springpole lathe to continuous rotation by adding a ratchet mechanism. I replaced his clever homemade ratchet with an ordinary bicycle sprocket commonly known as a freewheel, mounted on a shaft. The chain runs on this sprocket. As the treadle is depressed, the chain rotates the sprocket and shaft toward the turner. But as the spring pulls the treadle and chain back to the starting point, the ratchet in the freewheel disengages, allowing the shaft to continue turning in the same direction. A flywheel on the shaft keeps the work moving between power strokes. The bicycle freewheel is a rugged, though inexpensive, piece of 20th-century machinery. I found I needed one with the smallest high gear available: 13 teeth. Five-speed clusters with this sprocket are available at good bike shops and can be equipped with low gears of 21, 24 or more teeth. The larger sprockets offer lower lathe speeds and a higher mechanical advantage, useful for large work and for powering a drill bit in the lathe.

Photo: Richard Starr

Seventh-grader Mike Kelly turns a bongo-board roller on freewheel lathe. The lathe, which is about 5 ft. long and can swing 12 in., is the second Starr has built. He says, 'The first was kind of crude, but it allowed me to work most of the bugs out of the drive mechanism. The newer one is solid and easy to use but not a thing of beauty. I consider it a prototype subject to modification and improvement. If I were to build a third lathe, I would retain the same basic structure but I would make it much heavier and more rigid than this one.'

The freewheel is fixed to a ⅜-in. threaded shaft by locking a couple of nuts against it from either side. The shaft rides in ball bearings, which are set into wooden puppets and held in place by nuts pressing outwards against them. The threaded shaft is slightly undersized for standard ⅜-in. I.D. ball bearings and must be fitted with shims to make up the difference.

The speed of the lathe is affected by the size of the sprocket and by the point at which the chain is joined to the treadle. Mounting the chain farther from the treadle pivot magnifies the motion of the foot—the longer the extension, the faster the lathe will run for a given pumping speed. On our more recent lathe the chain is fixed 23 in. from the pivot, while the front edge of the footrest is 15 in. from the pivot. With the chain on the 13-tooth sprocket the lathe makes about 450 revolutions per minute at a relaxed pumping speed. It can be pushed to about 600 rpm by rapid treadling. Extremely low speeds are easy to maintain.

The treadle must be lightweight because part of the turner's effort is used to tension the spring for returning the treadle to its upper position. To keep lifted weight to a minimum, I used a ½-in. cherry plank for a footrest, mortised into

---

Richard Starr, 35, is a frequent contributor to this magazine. He lives in Thetford Center, Vt.

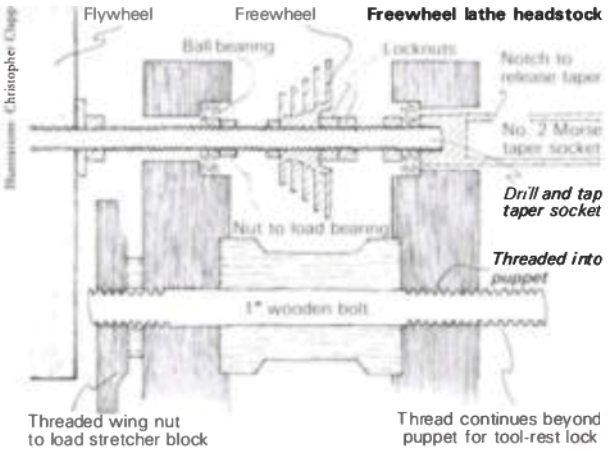

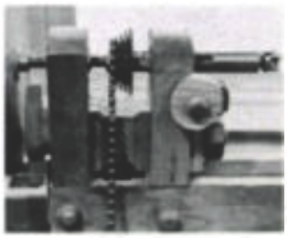

Freewheel lathe headstock. The socket accepts standard No. 2 Morse taper centers and chucks. Below the spindle shaft is a stretcher that locks the headstock puppets tightly together. The stretcher is mortised into both puppets, which are pulled against it by a wooden bolt passing through the center of the stretcher. The bolt is threaded into the right-hand puppet and is tensioned by a wing nut located between the flywheel and the left-hand puppet. The compression on the stretcher resists the outward pressure of the loaded bearings on the puppets. The right end of the wooden bolt extends beyond the right-hand puppet and serves as a threaded stud for the tool-rest extension lock.

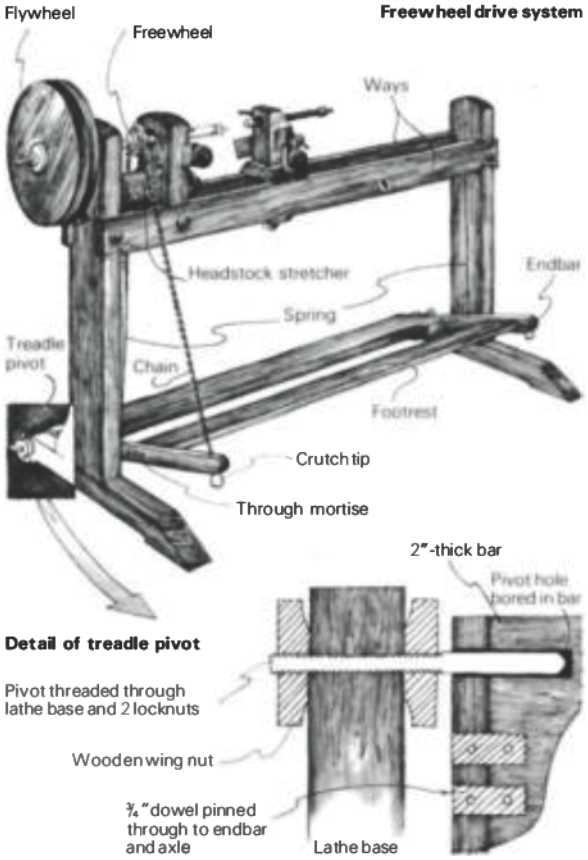

¾-in. endbars. The endbars are locked together by a heavy 2-in. square axle that adds no lifted weight because it is located along the axis of the pivot. The treadle is returned by the drive-system spring and by a second spring on the right end of the lathe. Without the helper spring, all the work of lifting the treadle would be transmitted through the drive chain, straining the lathe shaft and bearings and resulting in a sluggish return. My springs resemble those sold as screen-door closers but are limper. They are about 18 in. long and ¾ in. in diameter, from the local hardware store. The impact of the treadle hitting the floor is softened by mounting rubber crutch tips on wooden studs under the endbars.

Because the flywheel on a freewheel lathe runs at full spindle speed, it can be much smaller than one on a crank-and-flywheel lathe, but due to its speed it must be well balanced or the lathe will shake. I've found that wooden discs are seldom uniform in density and make poorly balanced flywheels. I solved the problem by cutting two discs from the same knot-free board and rotating them 180° to each other on the shaft, i.e., 12 o'clock to 6 o'clock. Discs cut from the same board tend to have similar distribution of density (if knot-free) and the opposed orientation cancels out most of the imbalance. The flywheel on our new lathe is 11 in. in diameter and almost 4 in. thick. Our older lathe runs with a 17-in. diameter wheel that is about 1½ in. thick and stores up more momentum. A much bigger flywheel, possibly a bicycle wheel, would not strain the mechanism and would make it easier to maintain high speeds and a longer coasting time. But I prefer lighter flywheels because they accumulate less power, making them safer for kids to use.

The headstock socket is made from a No. 2 Morse taper extension (available from hardware specialty houses), with the male end sawn off. The end is drilled and tapped to screw to the end of the shaft of the lathe. If the socket does not run true, the high point is marked and whacked with a wooden mallet until centered. Though the business end of the spur center in this socket extends more than 5 in. from its bearing, the structure is rigid and stays true.

I've used threaded wood fittings (*Fine Woodworking*, Spring '77 and Fall '77) to hold the lathe together and for all the tailstock and tool-rest adjustments. The tailstock quill is a hornbeam screw that has been drilled to accept a center made from a threaded rod. With the metal center removed, a hollow conical fixture can be screwed on for boring lamps and musical instruments. A ½-in. shell auger will pass through the bore of the quill.

The drawback of freewheel drive is that it's a little noisy. While the treadle is coming up the ball bearings in the freewheel clatter and the ratchet pawls click. I found that the noise was reduced considerably by packing the bearing races with axle grease.

One could think of other applications for this efficient footpowered drive system. It could be adapted to grinders, sanders, jigsaws and band saws. Woodworkers who prefer to rely on their own muscle power rather than on the electric company might put it to good use. □

AUTHOR'S NOTE: A "chain and freewheel" lathe was manufactured in Norfolk, England, in 1922 by Hobbies, Inc. There is a reference to their instruction book in *A Bibliography of the Art of Turning*, published by the Society of Ornamental Turners, 2 Parry Dr., Rustington, Littlehampton, Sussex, England BN16 2QY. It goes to show that good and simple ideas are seldom really new.